GENUINE PARTS

INSTALLATION INSTRUCTIONS

DESCRIPTION:	Splash Guard Kit - Rear Set
APPLICATION:	Altima
PART NUMBER:	T99J2 6CAxx (xx Designates color)

KIT CONTENTS:

Item	Qty.	Part Description	Service Part Number
A	1	Splash Guard - Rear Right	---
B	1	Splash Guard - Rear Left	---
C	1	Installation Instruction Replacement Template	999V2 AW000
D	1	Installation Hardware Kit	---
E	4	• Phillips Screw M5 x 20mm	14-51 00891
F	4	• Spring Nut M5	12-41 01011
G	2	• CLIP	15-53 05933

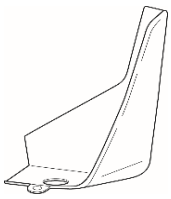

A

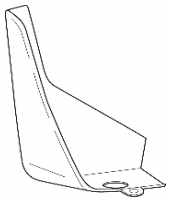

B

Important: Read Before Installation!

Dealer Installation Recommended.

WARNING

To prevent serious personal injury or property damage, refer to the Installation Instructions before attempting to install this accessory. The Installation Instructions provide the necessary procedures for a safe installation.

CUSTOMER INTERNET DOWNLOAD INSTRUCTIONS: Customers can obtain Installation Instructions for Infiniti or Nissan vehicles at www.Infiniti-TechInfo.com or www.Nissan-TechInfo.com respectively. From the home page, click on "Dealer Publications" and select "Accessory Instructions. Select your model and model year, then locate the instructions for your accessory.

DEALER ASIST DOWNLOAD INSTRUCTIONS: Dealership technicians can locate the installation instructions for this accessory in ASIST (INFO TOOLBOX). Always download and use latest version of the Installation Instructions.

Installation Instructions Replacement Template WW2 AW000 Rev. 08/14/08

C

E

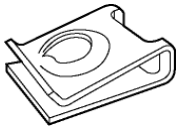

F

G

TOOLS REQUIRED:

- Phillips head short screwdriver
- Clip removal tool
- Drill
- 6mm (1/4'') drill bit
- Clean, lint-free wiping cloth
- Mild soap / water mixture
- 90% or greater alcohol

PRE-INSTALLATION WARNINGS, CAUTIONS, CRITICAL STEPS, and NOTES:

- Dealer Installation Recommended. Instructions may refer to Service Manual.
- These instructions are for left side of vehicle; same procedure applies to right side.

INSTALLATION PROCEDURE:

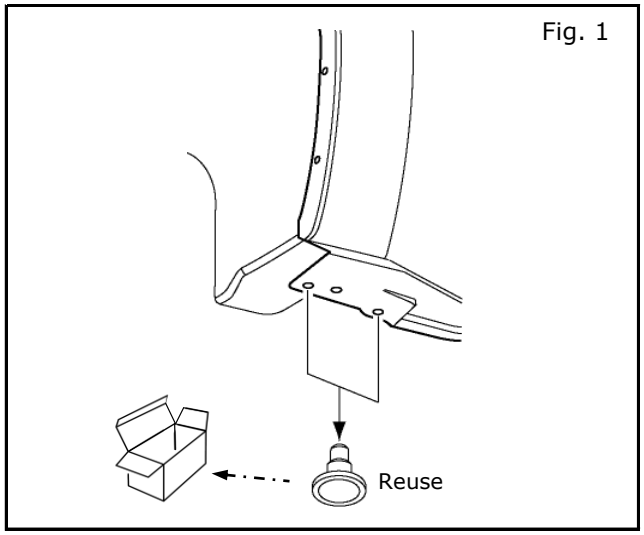

1) Remove clips from rear bumper and keep to reuse.

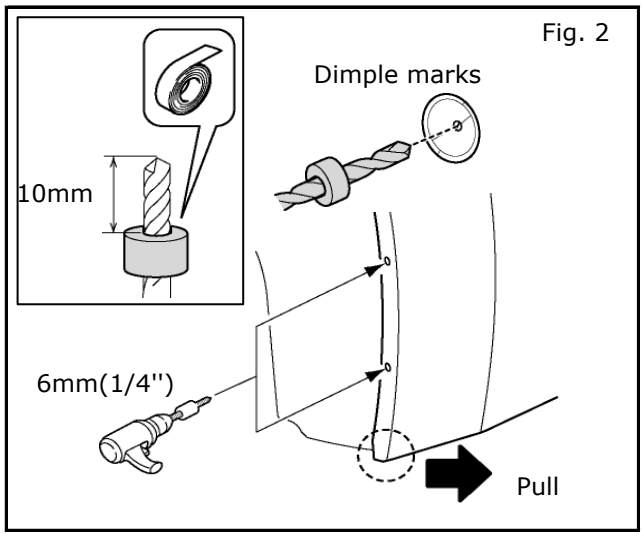

2) Pull out on bottom corner of rear bumper, and drill 6mm(1/4'') holes at dimple locations.

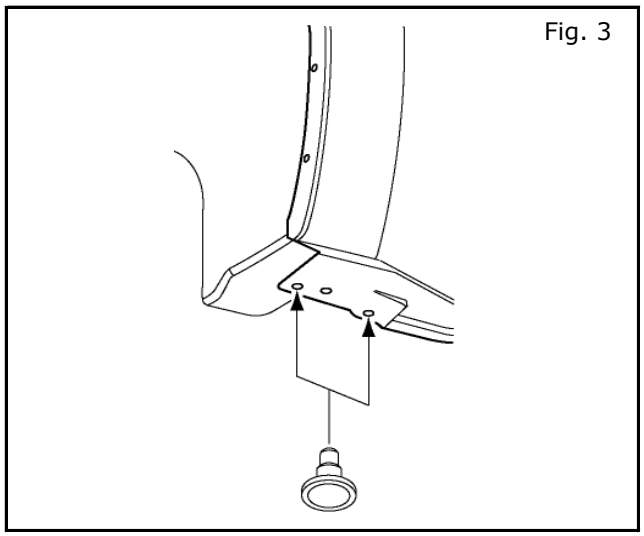

3) Reinstall clips.

INSTALLATION PROCEDURE:

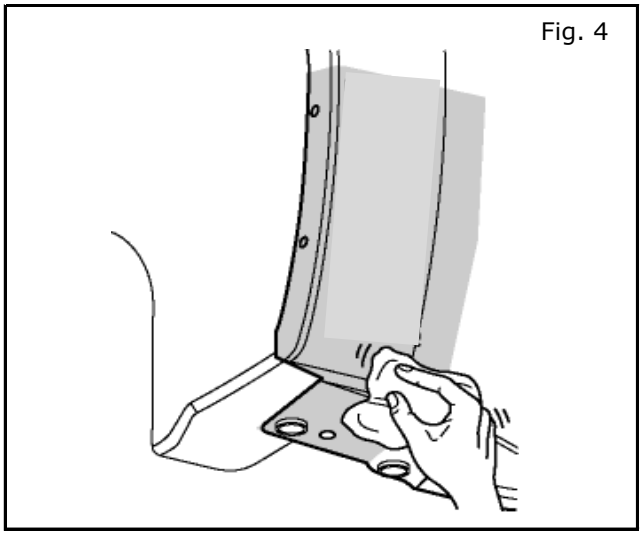

4) Clean installation surface (shaded area) with mild soap/water mixture.

5) Using a clean, lint free cloth, wipe tape area with 90% or greater alcohol.

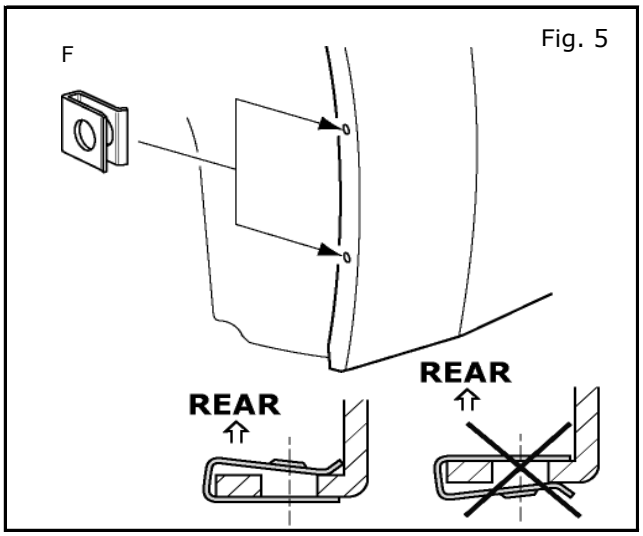

6) Install spring nuts(F).

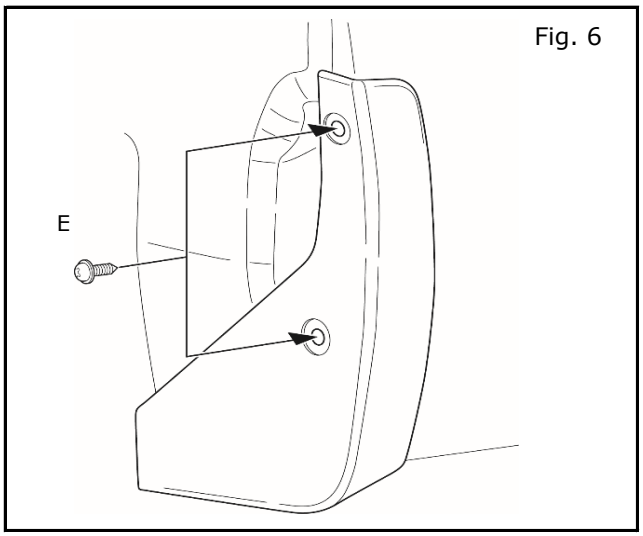

7) Align rear splash guard to vehicle and loosely install phillips screws(E).

INSTALLATION PROCEDURE:

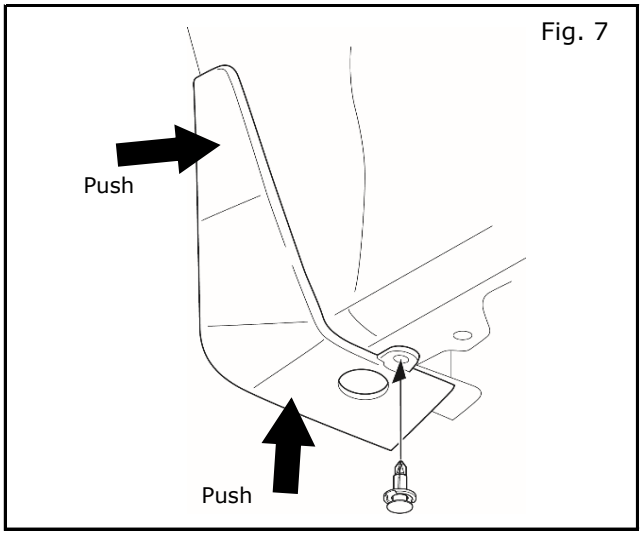

8) Push splash guard upward/inward and install clip(G).

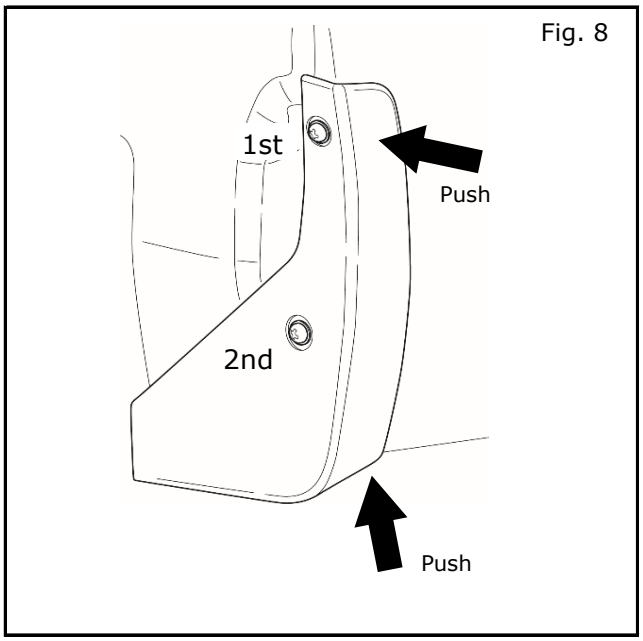

9) Push splash guard upward/inward, and tighten phillips screw(E) in sequence shown.

NOTE:
Do not over tighten screws. Reference tightening torque 3.8~4.4 N-m (33.6~38.9 lb-in).

ACCESSORY CHECK:

- [ ] Check all torque values.
- [ ] Clean rear bumper near installation areas of vehicle.

FINAL INSPECTION:

- [ ] Verify exterior is not damaged.