NISSAN

Part Number	KE540-3V020XX (XX designates color)

Versa - Note
Nissan International S.A.
Made in Italy

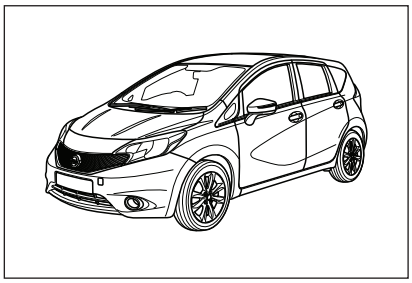

Part Name: Front Lip Finisher - Painted

LIST OF PARTS

No.	PART NAME	Q.TY
1	Front Lip Finisher	1
2	Screw	3
3	Cleaner tissue	1

LIST OF PARTS

No.	PART NAME	Q.TY
4	Installation Instruction Replacement Template	1

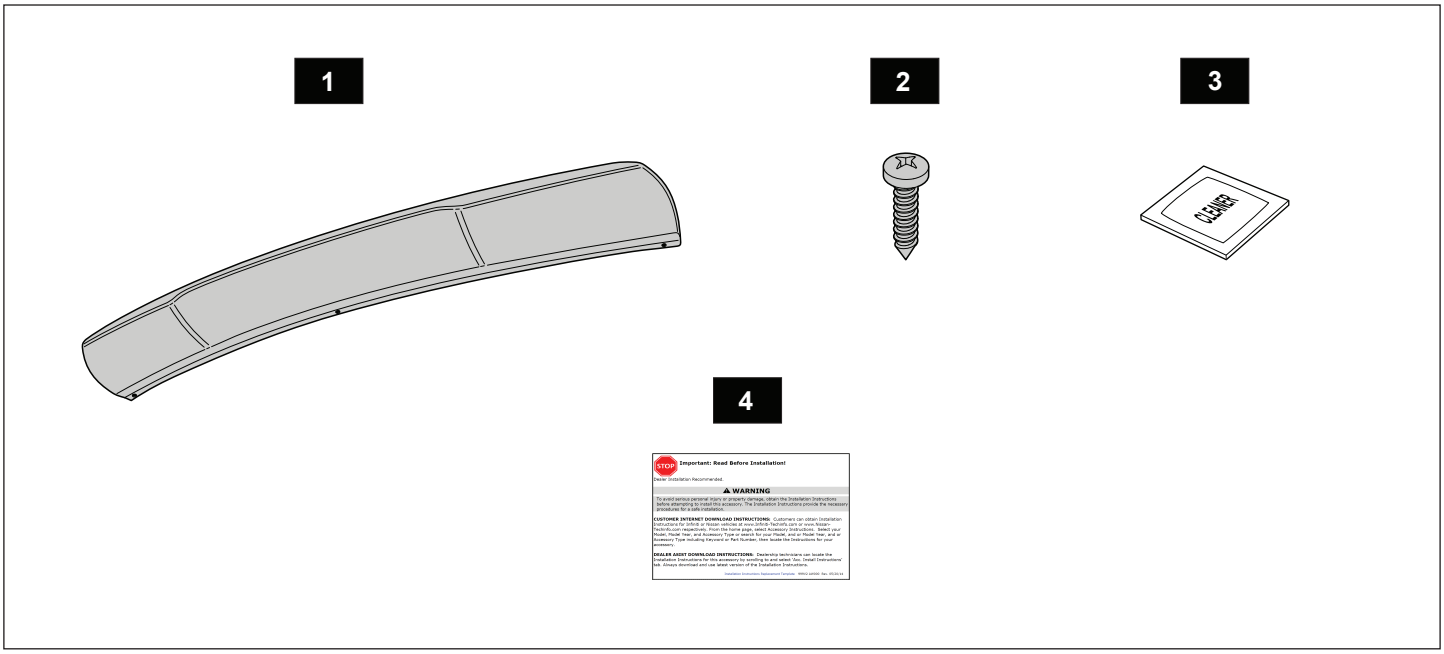

TOOLS REQUIRED

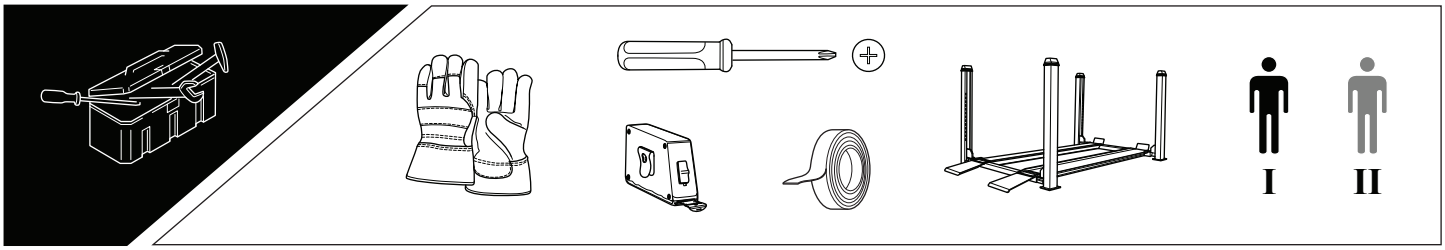

NOTE: Dealer Installation Recommended

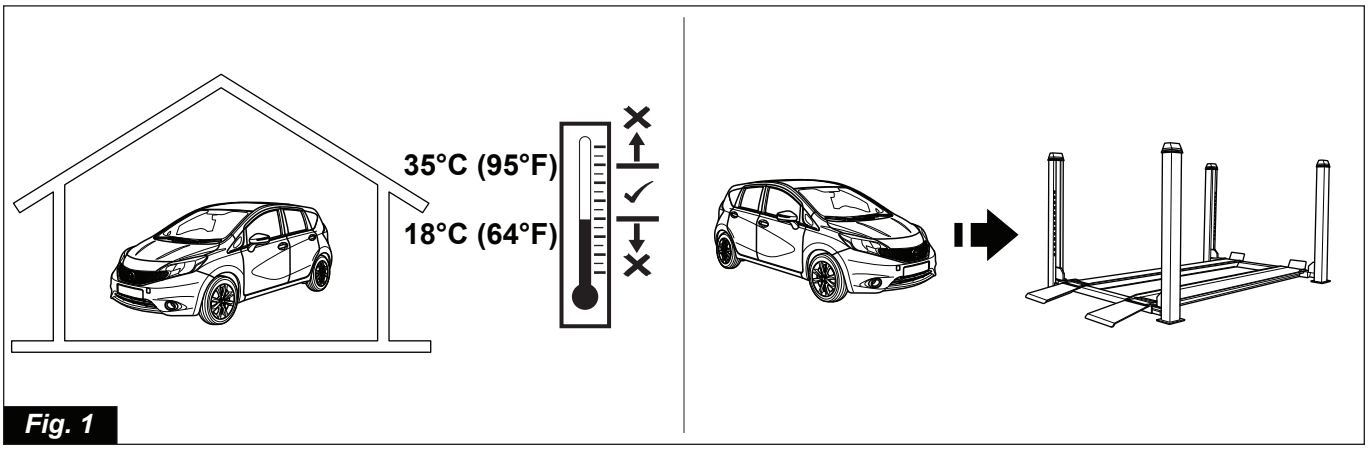

Fig. 1

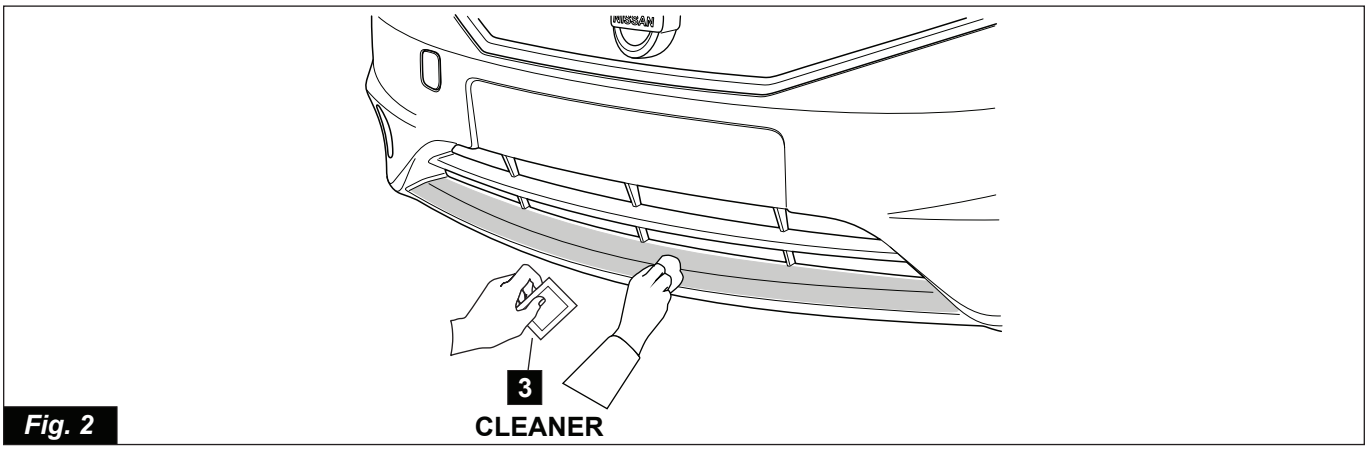

Fig. 2

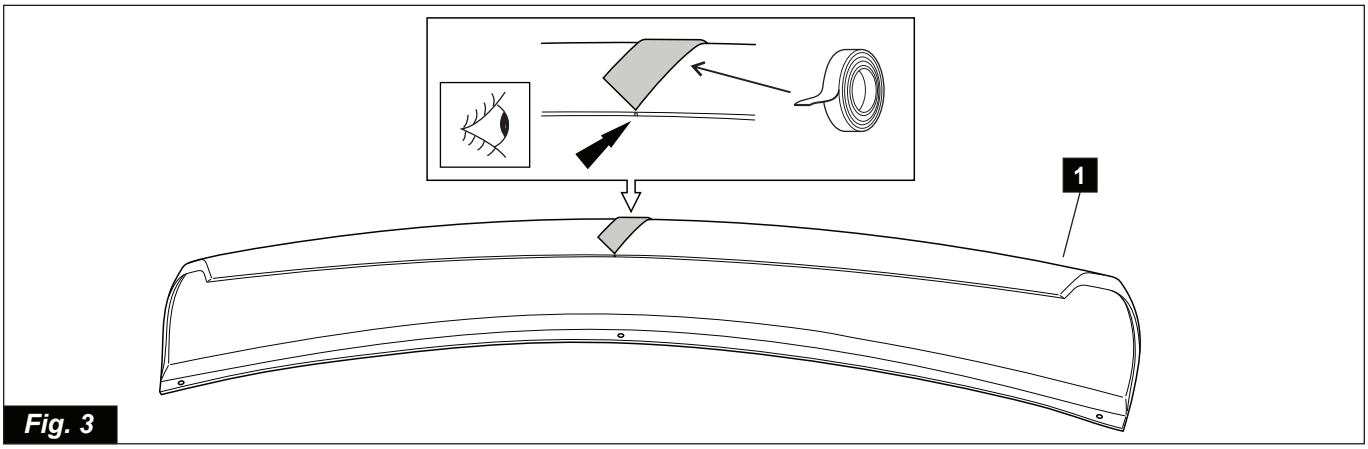

Fig. 3

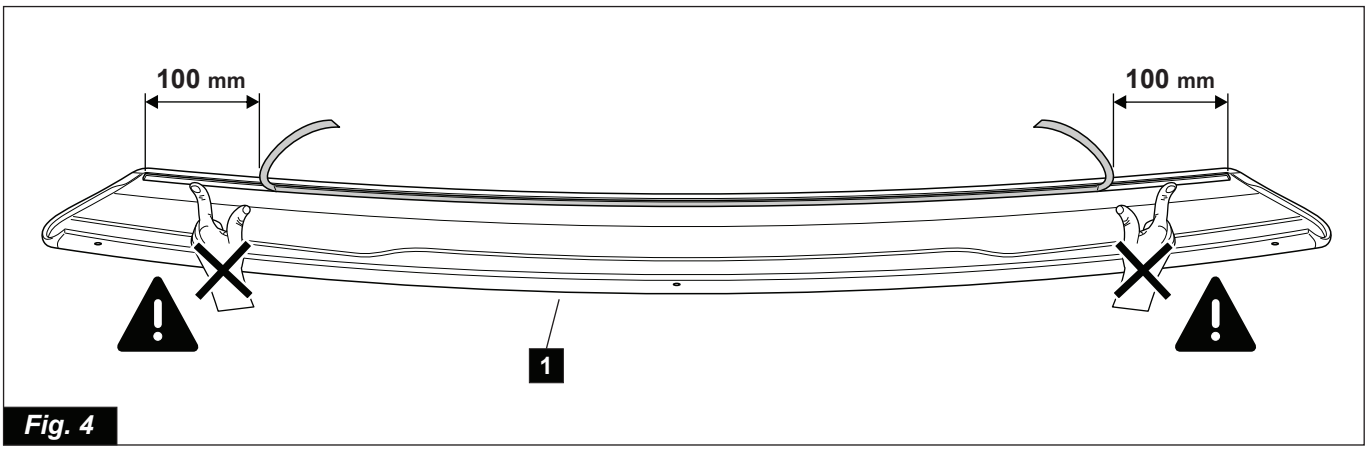

Fig. 4

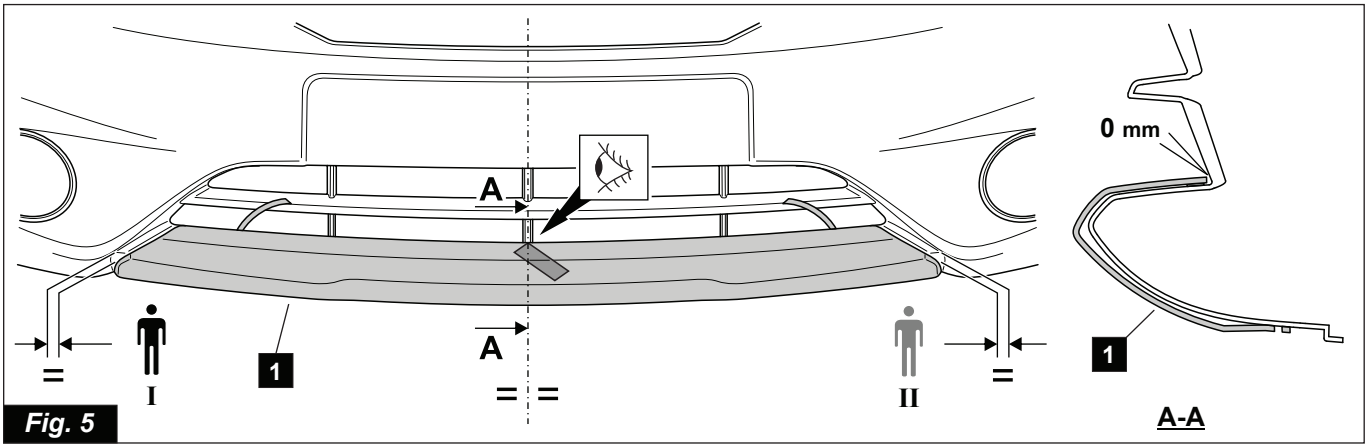

Fig. 5

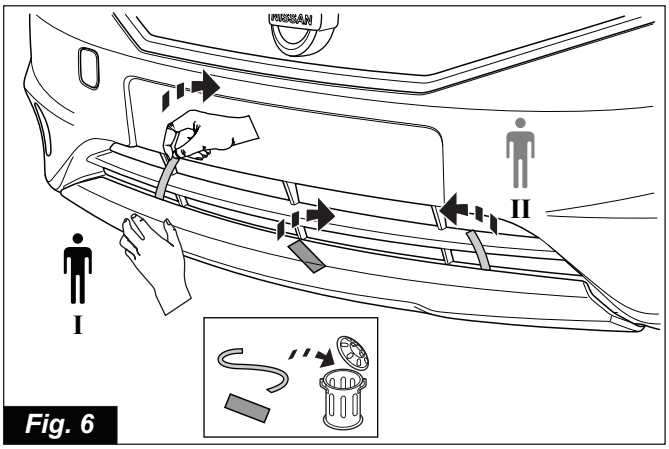

Fig. 6

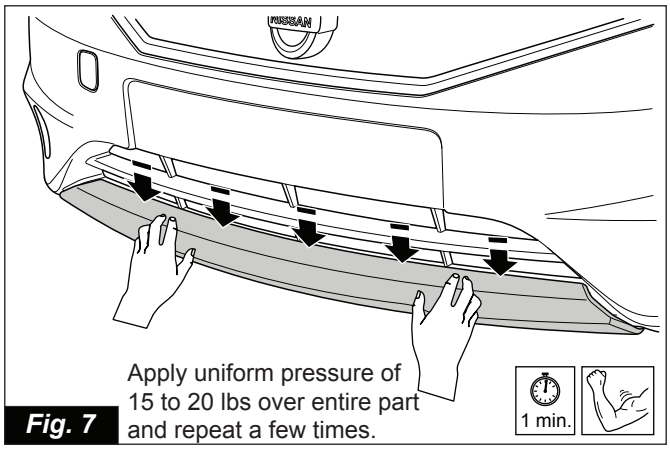

Fig. 7

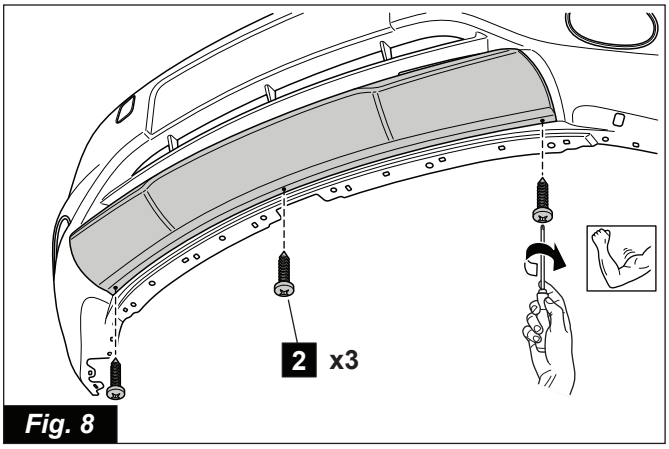

Fig. 8